At the payload bay.

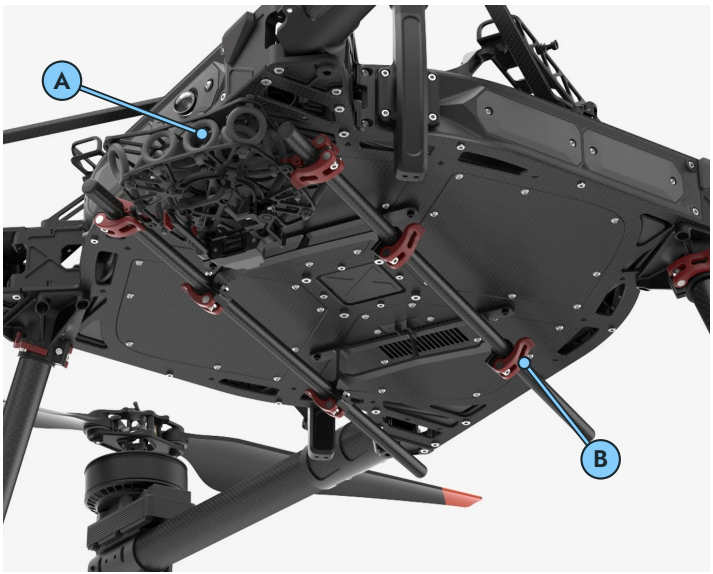

CHASSIS UNDERSIDE

A Isolation assembly

The suspended mount helps isolate the camera from vibration in the airframe.

B 12 mm payload rails

The two rails run beneath the chassis. The mount can move fore or aft to adjust the view.

Hand off the build.

- ☐ **Match the case to the camera.**
  Match the camera letter on the body, the media case and the camera report.

- ☐ **Record the last setup.**
  Log the frame rate, shutter and recording format. Include a still of the intended framing.

- ☐ **Flag the last swap.**
  If a lens, filter or battery changed, update the camera brief and tell the aerial lead.

BUILD / CASE ID _____ RECEIVED BY _____

Freefly Alta X Gen2 manual
docs.freeflysystems.com/alta-x-gen2